| Code: | BK1-32 |
|---|---|

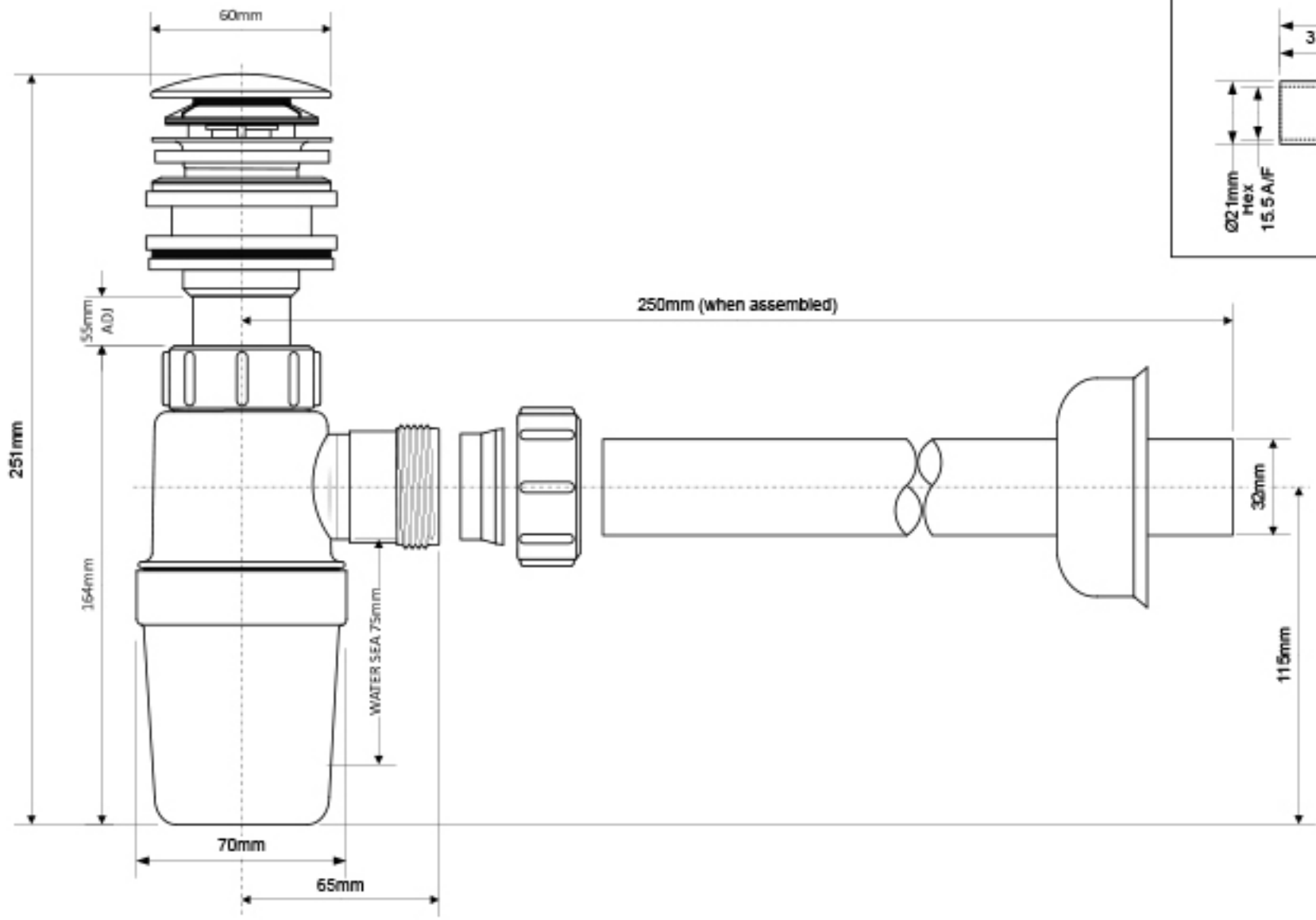


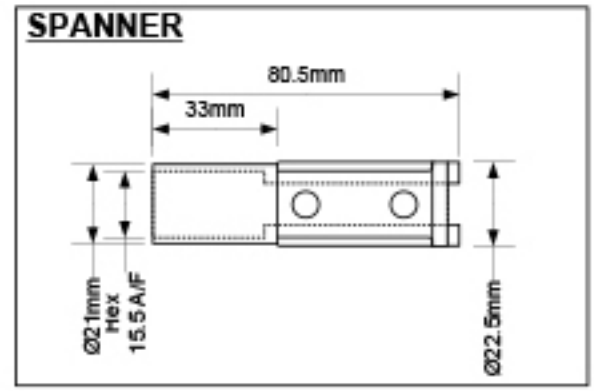


© McALPINE

| Drawing verified correct as of: | DRAWN BY TC | REVISED | FILENAME BK1-32.VSD |
|---|---|---|---|
| | | SCALE 1: 2 | DATE 30.11.21 |