DETAILED DIMENSIONS

ALSACE-ARDENNES (¼T LEFT, CABLES OR STRINGERS BANISTER)

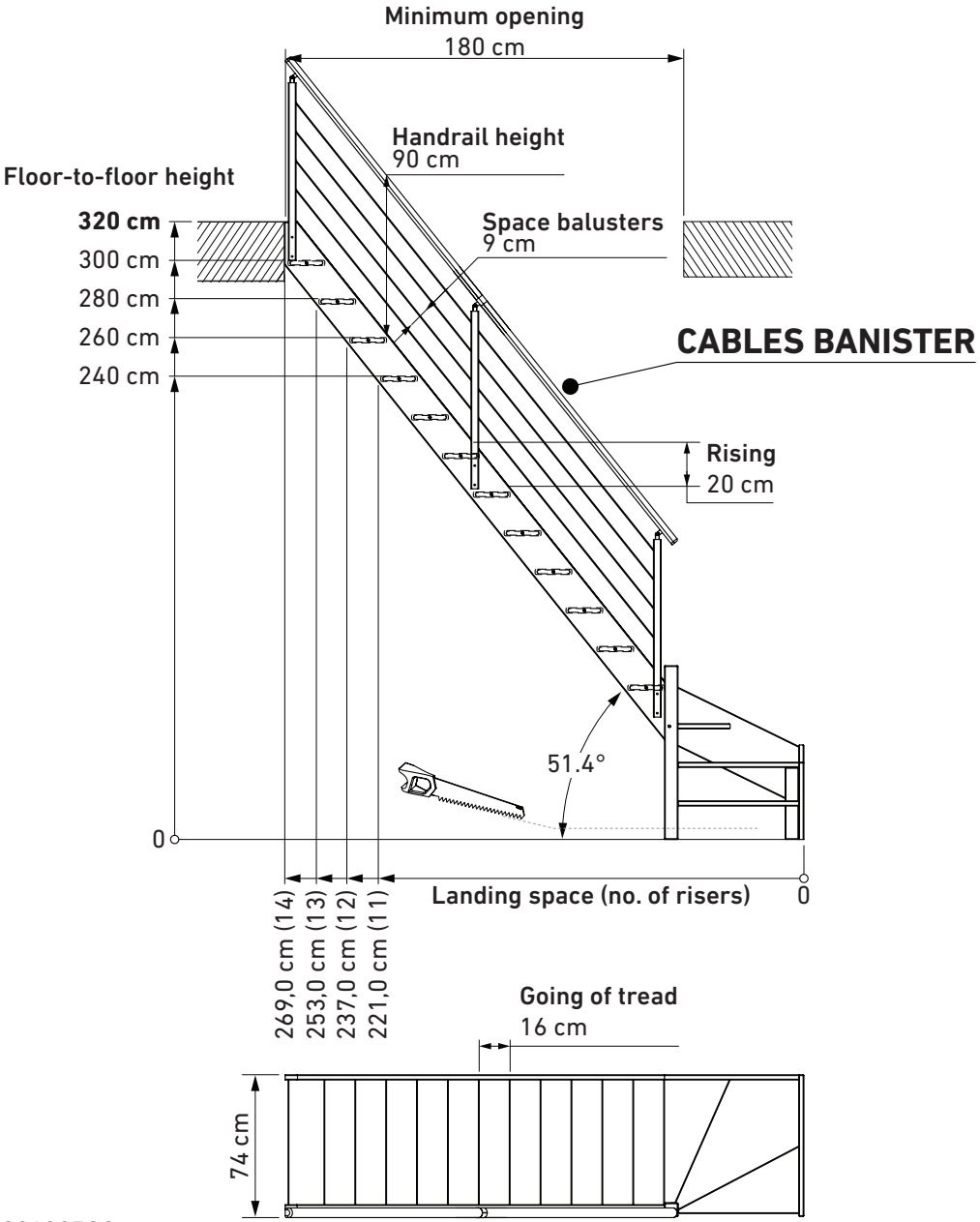

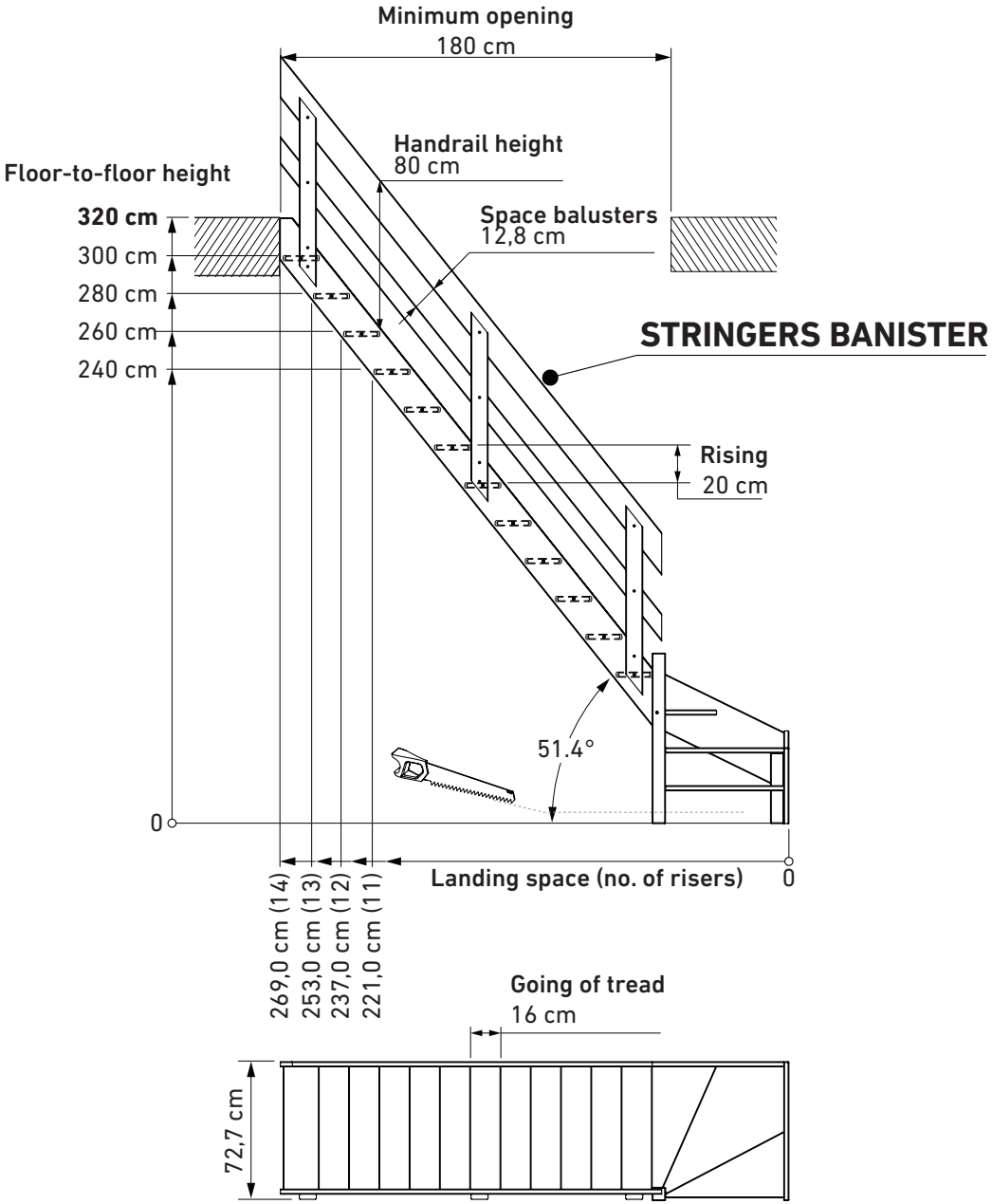

081225SO