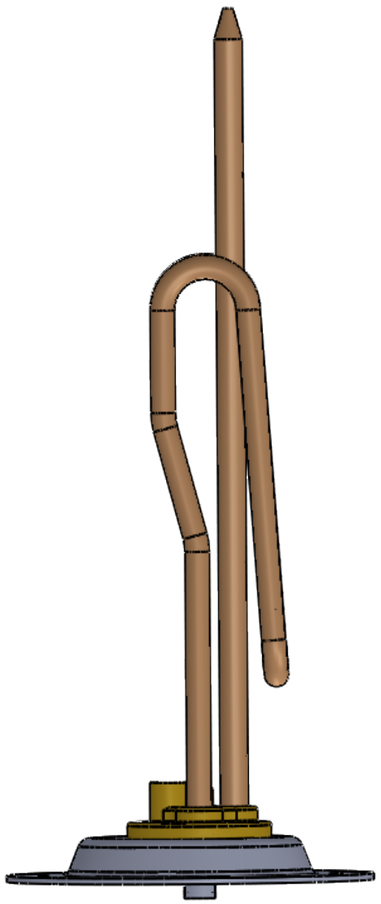

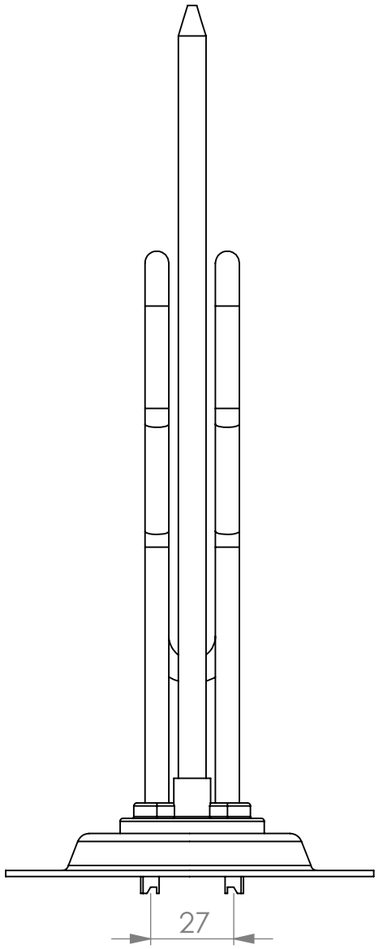

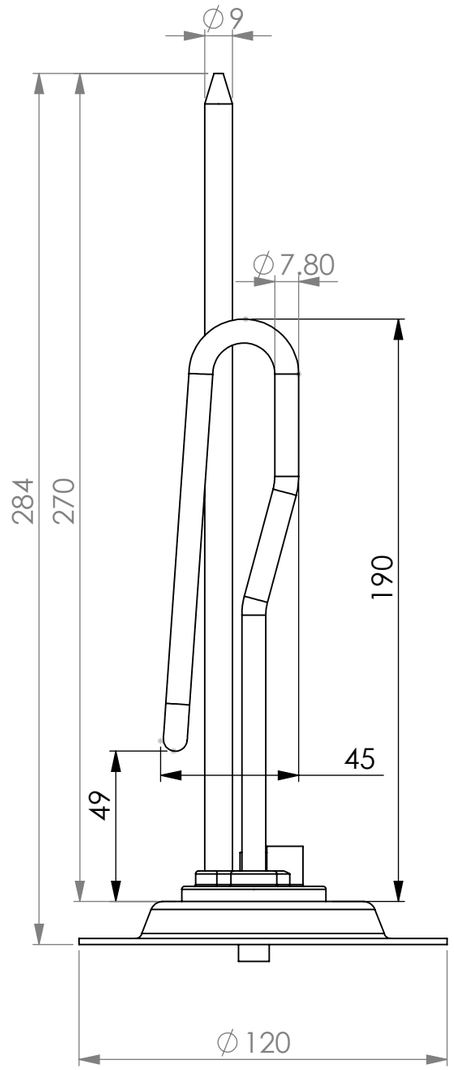

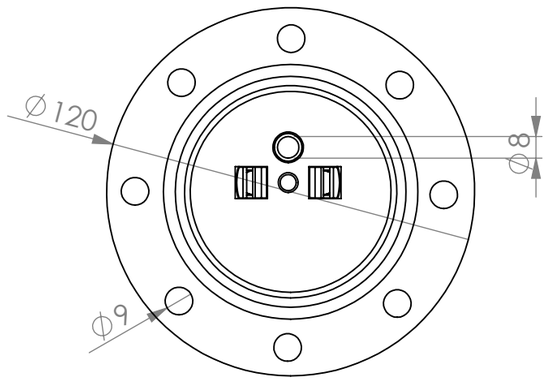

UNLESS OTHERWISE SPECIFIED: DIMENSIONS ARE IN MILLIMETERS SURFACE FINISH: TOLERANCES: LINEAR: ANGULAR:	FINISH:			DEBURR AND BREAK SHARP EDGES	DO NOT SCALE DRAWING	REVISION	
	NAME	SIGNATURE	DATE		TITLE: Leov Company		
DRAWN	Elizabeta Miskova						
CHK'D	Borce Bogdanovski						
APPV'D							
MFG							
Q.A				MATERIAL:	DWG NO. Heating element 1,5 kW on L1 flange		A3
				WEIGHT:	SCALE:1:5	SHEET 1 OF 1	