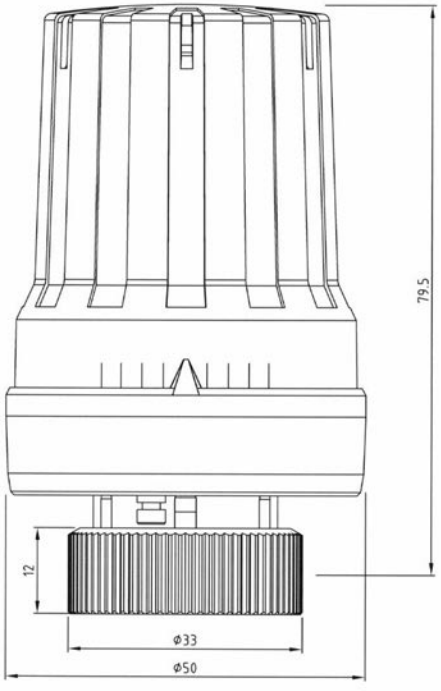
79.5
12
ϕ33
ϕ50

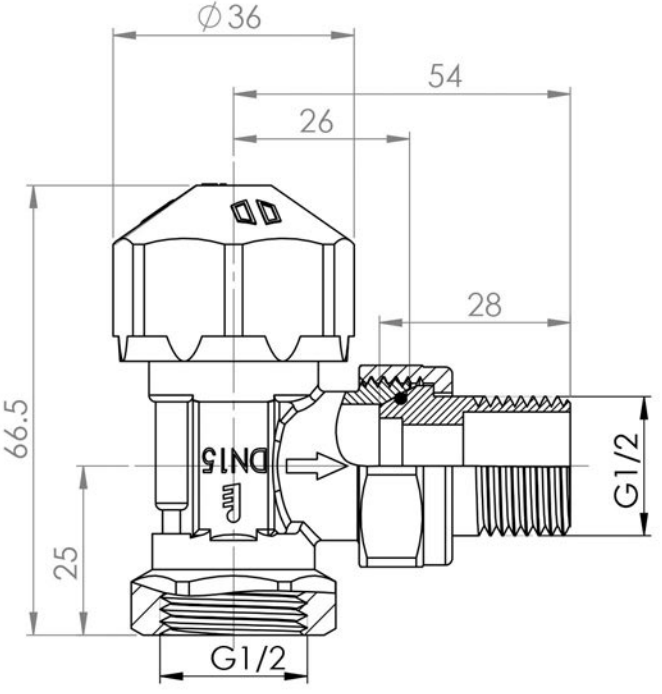
∅36
54
26
28
66.5
DN15
25
G1/2
G1/2